DATA SHEET PHOTOELECTRIC SENSOR V1.2

OS50 SERIES

ARTICLE PROPERTIES

SENSOR TYPE	Photoelectric sensor
SIZE	See dimensions
OPERATING DISTANCE	See table
DETECTION MODE	Opposed, Retro-reflective, Polarized retro-reflective, Diffused

CONNECTION TYPES (*see table*)

- Cable — PVC, 0.34 mm², 2 m**
- M12 connector

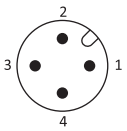

** Other cable lengths are available on request

TECHNICAL DATA

OPERATING VOLTAGE	10 ... 30 V DC (NPN, PNP), 24 ... 240 V AC/DC (relay type)
RIPPLE VOLTAGE	≤ 10 %
LASER CLASS	Red laser: 650 nm / class 1 Red light: 650 nm Infrared light: 940 nm
LIGHT SPOT SIZE	See Beam Pattern
OUTPUT	NPN, PNP, relay
FREQUENCY	See table
CURRENT CONSUMPTION	≤ 25 mA
LOAD CURRENT	≤ 200 mA (NPN, PNP), ≤ 3 A (relay type)
HOUSING MATERIAL	PBT + ABS
VOLTAGE WITHSTANDING	1000 V/AC, 50/60 Hz, 60 s

REVERSE POLARITY PROTECTION	Yes
OVERLOAD RESISTANCE	Yes
SHORT CIRCUIT PROTECTION	Yes
ELECTRICAL SURGE PROTECTION	Yes, (relay type)
MTTF	
• Emitter	504 years
• Receiver	290 years
• Retro-reflective and diffused	284 years
• Relay	29 years

ENVIRONMENTAL CONDITIONS

OPERATING ENVIRONMENT HUMIDITY	35 % to 85 % RH (no condensation)
PROTECTION CLASS	IP67
STORAGE TEMPERATURE	-25 ... +55 °C
AMBIENT TEMPERATURE	-40 ... +70 °C

INSULATION IMPEDENCE	≥50 MΩ (500 V DC)
SHOCK RESISTANCE (EN 60068-2-27)	500 m/s² (50 G) 3 times X, Y, Z respectively
IMPACT RESISTANCE (EN 60068-2-6)	Complex amplitude 1.5 mm 10 ... 50 Hz (2hr X, Y, Z respectively)
ANTI-AMBIENT LIGHT	≤ 5000 Lux

STANDARDS AND DIRECTIVES

EMC DIRECTIVE 2014/30/EU	EN IEC 60947-5-2
ROHS DIRECTIVE 2011/65/EU	EN IEC 63000

OS50 SERIES

APPROVALS

CE

DETECTION MODE OPPOSED

Article number	Operating distance	Light source	Frequency	Output (wiring diagram)	Switching mode	Connection	Dimensions
OS50-S6 (emitter)	40 m	Infrared	——	—— (WD1)	——	2 m cable	*see Fig. 1*
OS50-EVP6 (receiver)	40 m	——	800 Hz	PNP (WD3)	L.O + D.O	2 m cable	*see Fig. 1*
OS50-EVN6 (receiver)	40 m	——	800 Hz	NPN (WD4)	L.O + D.O	2 m cable	*see Fig. 1*
OS50-S6Q (emitter)	40 m	Infrared	——	——(WD2)	——	M12 connector	*see Fig. 2*
OS50-EVP6Q (receiver)	40 m	——	800 Hz	PNP (WD5)	L.O + D.O	M12 connector	*see Fig. 2*
OS50-EVN6Q (receiver)	40 m	——	800 Hz	NPN (WD6)	L.O + D.O	M12 connector	*see Fig. 2*
OS50-S5 (emitter)	40 m	Infrared	——	——(WD11)	——	2 m cable	*see Fig. 1*
OS50-EVR5 (receiver)	40 m	——	50 Hz	Relay(WD12)	L.O + D.O	2 m cable	*see Fig. 1*

DETECTION MODE OPPOSED

Article number	Operating distance	Light source	Frequency	Output (wiring diagram)	Switching mode	Connection	Dimensions
OS50-S206 (emitter)	20 m	Red	——	—— (WD1)	——	2 m cable	*see Fig. 1*
OS50-E20VP6 (receiver)	20 m	——	800 Hz	PNP (WD3)	L.O + D.O	2 m cable	*see Fig. 1*
OS50-E20VN6 (receiver)	20 m	——	800 Hz	NPN (WD4)	L.O + D.O	2 m cable	*see Fig. 1*
OS50-S206Q (emitter)	20 m	Red	——	——(WD2)	——	M12 connector	*see Fig. 2*
OS50-E20VP6Q (receiver)	20 m	——	800 Hz	PNP (WD5)	L.O + D.O	M12 connector	*see Fig. 2*
OS50-E20VN6Q (receiver)	20 m	——	800 Hz	NPN (WD6)	L.O + D.O	M12 connector	*see Fig. 2*
OS50-S205 (emitter)	20 m	Red	——	——(WD11)	——	2 m cable	*see Fig. 1*
OS50-E20VR5 (receiver)	20 m	——	50 Hz	Relay(WD12)	L.O + D.O	2 m cable	*see Fig. 1*

DETECTION MODE OPPOSED

Article number	Operating distance	Light source	Frequency	Output (wiring diagram)	Switching mode	Connection	Dimensions
OS50-SL6 (emitter)	60 m	Laser	——	—— (WD1)	——	2 m cable	*see Fig. 1*
OS50-ELVP6 (receiver)	60 m	——	800 Hz	PNP (WD3)	L.O + D.O	2 m cable	*see Fig. 1*
OS50-ELVN6 (receiver)	60 m	——	800 Hz	NPN (WD4)	L.O + D.O	2 m cable	*see Fig. 1*
OS50-SL6Q (emitter)	60 m	Laser	——	——(WD2)	——	M12 connector	*see Fig. 2*
OS50-ELVP6Q (receiver)	60 m	——	800 Hz	PNP (WD5)	L.O + D.O	M12 connector	*see Fig. 2*
OS50-ELVN6Q (receiver)	60 m	——	800 Hz	NPN (WD6)	L.O + D.O	M12 connector	*see Fig. 2*
OS50-SL5 (emitter)	60 m	Laser	——	——(WD11)	——	2 m cable	*see Fig. 1*
OS50-ELVR5 (receiver)	60 m	——	50 Hz	Relay(WD12)	L.O + D.O	2 m cable	*see Fig. 1*

OS50 SERIES

DETECTION MODE RETRO-REFLECTIVE

The detection distance corresponds to the reflector RB50*50-1

Article number	Operating distance	Light source	Frequency	Output (wiring diagram)	Switching mode	Connection	Dimensions
OS50-RVP6	10 m	Red	800 Hz	PNP (WD3)	L.O + D.O	2 m cable	*see Fig. 3*
OS50-RVN6	10 m	Red	800 Hz	NPN (WD4)	L.O + D.O	2 m cable	*see Fig. 3*
OS50-RVP6Q	10 m	Red	800 Hz	PNP (WD5)	L.O + D.O	M12 connector	*see Fig. 4*
OS50-RVN6Q	10 m	Red	800 Hz	NPN (WD6)	L.O + D.O	M12 connector	*see Fig. 4*
OS50-RVR5	10 m	Red	50 Hz	Relay (WD12)	L.O + D.O	2 m cable	*see Fig. 3*

DETECTION MODE POLARIZED RETRO-REFLECTIVE

The detection distance corresponds to the reflector RB50*50-1

Article number	Operating distance	Light source	Frequency	Output (wiring diagram)	Switching mode	Connection	Dimensions
OS50-RPVP6	6 m	Red	800 Hz	PNP (WD3)	L.O + D.O	2 m cable	*see Fig. 3*
OS50-RPVN6	6 m	Red	800 Hz	NPN (WD4)	L.O + D.O	2 m cable	*see Fig. 3*
OS50-RPVP6Q	6 m	Red	800 Hz	PNP (WD5)	L.O + D.O	M12 connector	*see Fig. 4*
OS50-RPVN6Q	6 m	Red	800 Hz	NPN (WD6)	L.O + D.O	M12 connector	*see Fig. 4*
OS50-RPVR5	6 m	Red	50 Hz	Relay (WD12)	L.O + D.O	2 m cable	*see Fig. 3*

DETECTION MODE DIFFUSED

Article number	Operating distance	Light source	Frequency	Output (wiring diagram)	Switching mode	Connection	Dimensions
OS50-K1000VP6	1000 mm	Red	800 Hz	PNP (WD7)	L.O + D.O	2 m cable	*see Fig. 3*
OS50-K1000VN6	1000 mm	Red	800 Hz	NPN (WD8)	L.O + D.O	2 m cable	*see Fig. 3*
OS50-K1000VP6Q	1000 mm	Red	800 Hz	PNP (WD9)	L.O + D.O	M12 connector	*see Fig. 4*
OS50-K1000VN6Q	1000 mm	Red	800 Hz	NPN (WD10)	L.O + D.O	M12 connector	*see Fig. 4*
OS50-K1000VR5	1000 mm	Red	50 Hz	Relay (WD12)	L.O + D.O	2 m cable	*see Fig. 3*

DETECTION MODE DIFFUSED

Article number	Operating distance	Light source	Frequency	Output (wiring diagram)	Switching mode	Connection	Dimensions
OS50-K2500VP6	2500 mm	Infrared	800 Hz	PNP (WD7)	L.O + D.O	2 m cable	*see Fig. 3*
OS50-K2500VN6	2500 mm	Infrared	800 Hz	NPN (WD8)	L.O + D.O	2 m cable	*see Fig. 3*
OS50-K2500VP6Q	2500 mm	Infrared	800 Hz	PNP (WD9)	L.O + D.O	M12 connector	*see Fig. 4*
OS50-K2500VN6Q	2500 mm	Infrared	800 Hz	NPN (WD10)	L.O + D.O	M12 connector	*see Fig. 4*
OS50-K2500VR5	2500 mm	Infrared	50 Hz	Relay (WD12)	L.O + D.O	2 m cable	*see Fig. 3*

OS50 SERIES

DETECTION MODE DIFFUSED

Article number	Operating distance	Light source	Frequency	Output (wiring diagram)	Switching mode	Connection	Dimensions
OS50-K3500VP6	3500 mm	Infrared laser	800 Hz	PNP (WD7)	L.O + D.O	2 m cable	*see Fig. 3*
OS50-K3500VN6	3500 mm	Infrared laser	800 Hz	NPN (WD8)	L.O + D.O	2 m cable	*see Fig. 3*
OS50-K3500VP6Q	3500 mm	Infrared laser	800 Hz	PNP (WD9)	L.O + D.O	M12 connector	*see Fig. 4*
OS50-K3500VN6Q	3500 mm	Infrared laser	800 Hz	NPN (WD10)	L.O + D.O	M12 connector	*see Fig. 4*
OS50-K3500VR5	3500 mm	Infrared laser	50 Hz	Relay (WD12)	L.O + D.O	2 m cable	*see Fig. 3*
OS50-K7000VP6	7000 mm	Infrared laser	800 Hz	PNP (WD7)	L.O + D.O	2 m cable	*see Fig. 3*
OS50-K7000VN6	7000 mm	Infrared laser	800 Hz	NPN (WD8)	L.O + D.O	2 m cable	*see Fig. 3*
OS50-K7000VP6Q	7000 mm	Infrared laser	800 Hz	PNP (WD9)	L.O + D.O	M12 connector	*see Fig. 4*
OS50-K7000VN6Q	7000 mm	Infrared laser	800 Hz	NPN (WD10)	L.O + D.O	M12 connector	*see Fig. 4*
OS50-K7000VR5	7000 mm	Infrared laser	50 Hz	Relay (WD12)	L.O + D.O	2 m cable	*see Fig. 3*

WIRING DIAGRAMS

WD1 Emitter

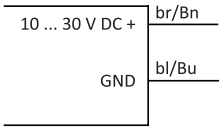

WD2 Emitter

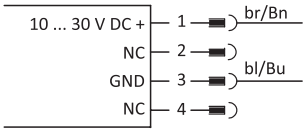

WD3 PNP / Light on | Dark on

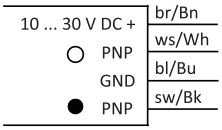

WD4 NPN / Light on | Dark on

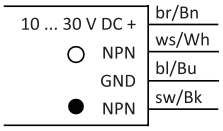

WD5 PNP / Light on | Dark on

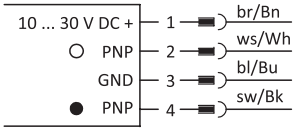

WD6 NPN / Light on | Dark on

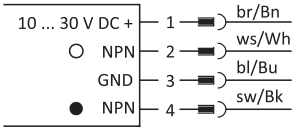

WD7 PNP / Light on | Dark on

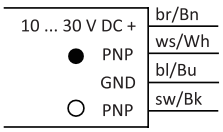

WD8 NPN / Light on | Dark on

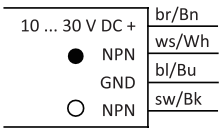

WD9 PNP / Light on | Dark on

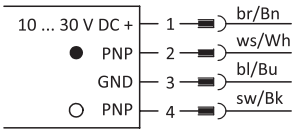

OS50 SERIES

WIRING DIAGRAMS

WD10 NPN / Light on | Dark on

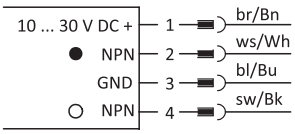

WD11 Emitter

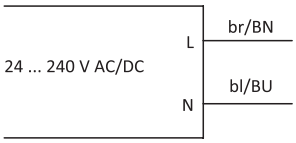

WD12 Relay / Light on | Dark on

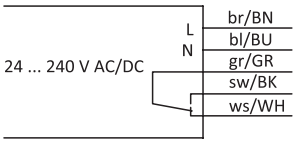

ATTENUATION FIGURE

OS50-K1000VP6

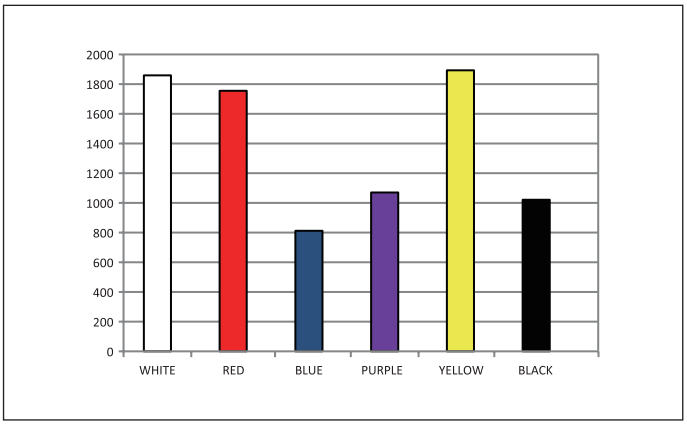

OS50-K3500VP6

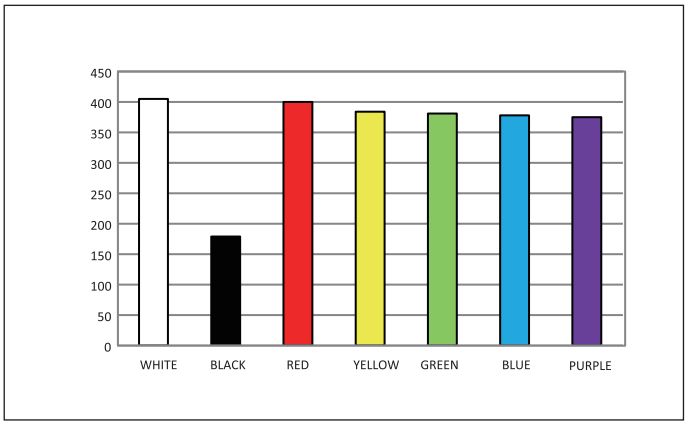

OS50-K1000VR5

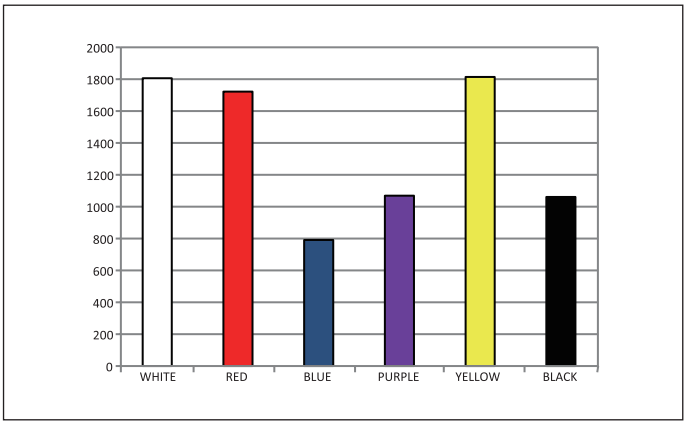

OS50-K7000VR5

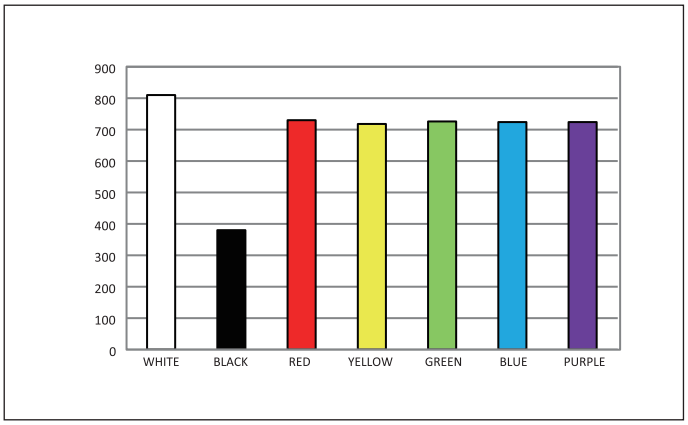

OS50 SERIES

TRANSLATION CHARACTERISTIC CURVE

40 m opposed

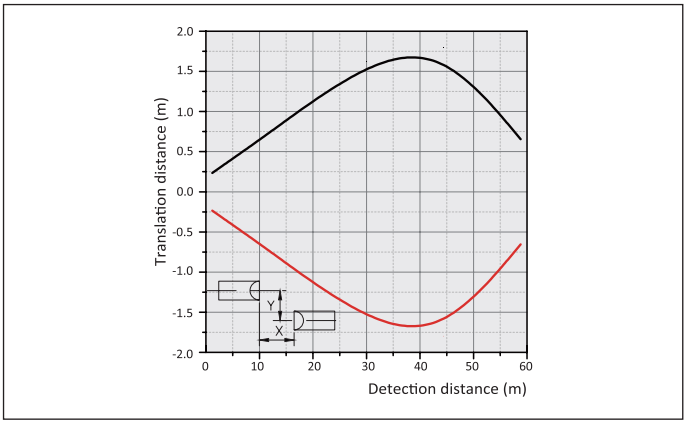

20 m opposed

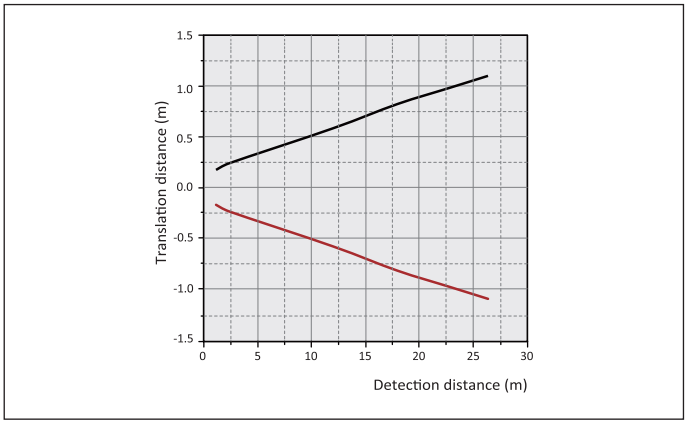

10 m retro-reflective

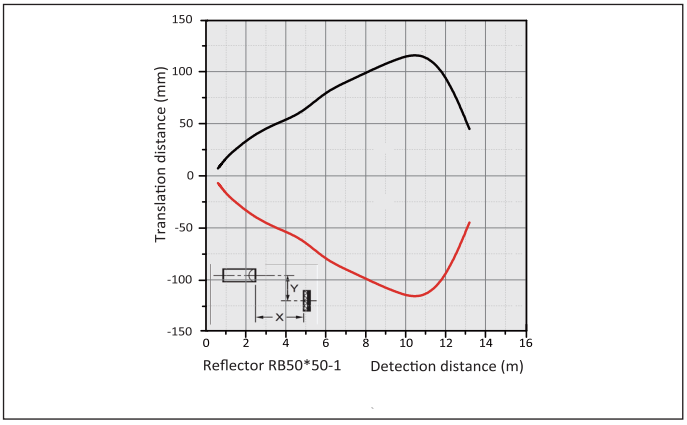

6 m polarized retro-reflective

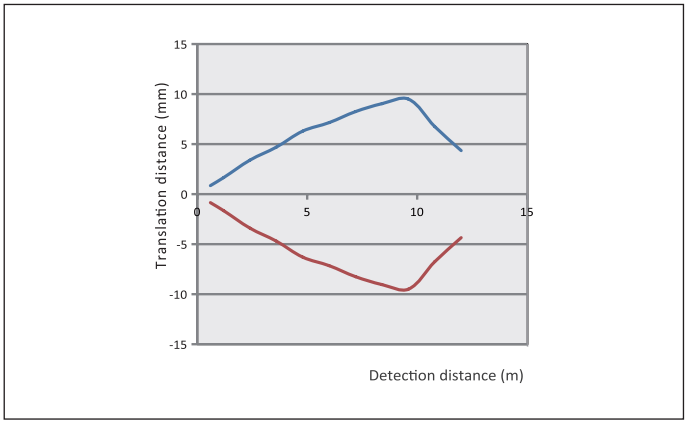

3.5 m diffused

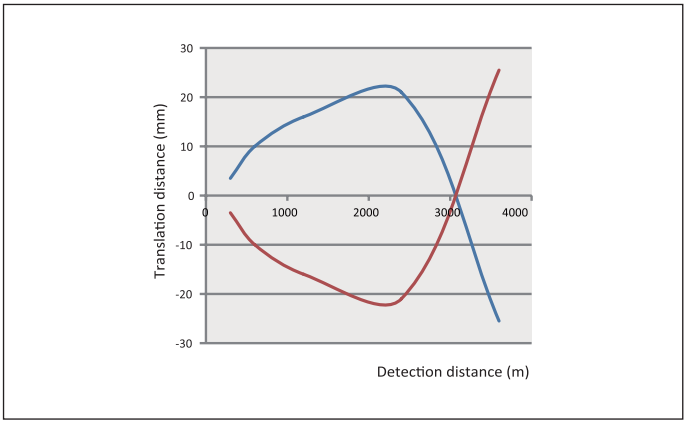

7 m diffused

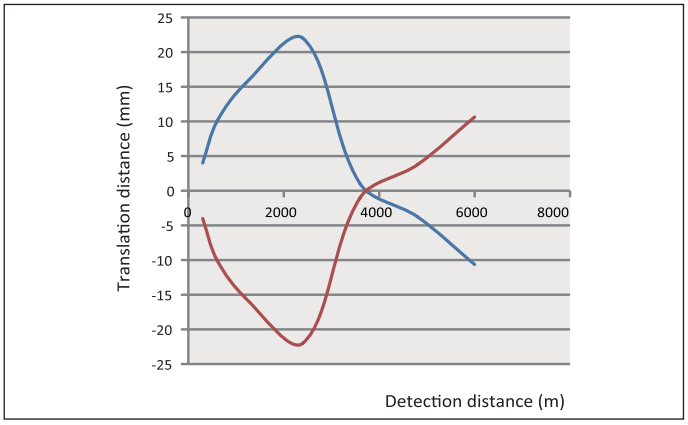

OS50 SERIES

BEAM PATTERN

OS50-S6/S5 (cm)

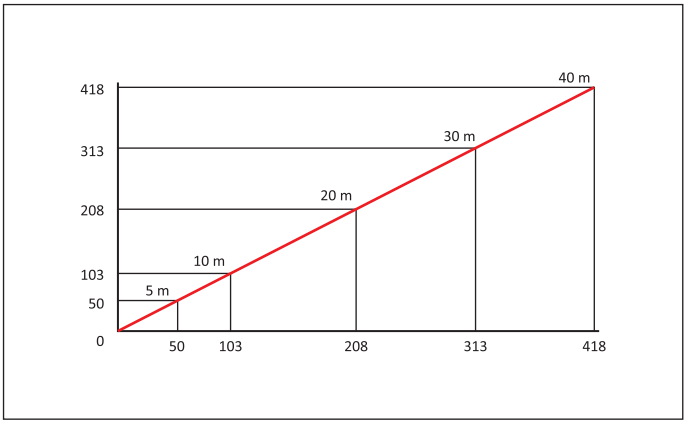

OS50-206/205 (mm)

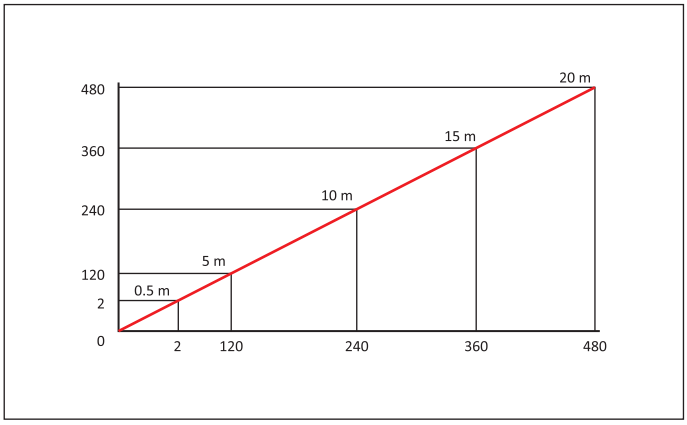

OS50-SL6/SL5 (mm)

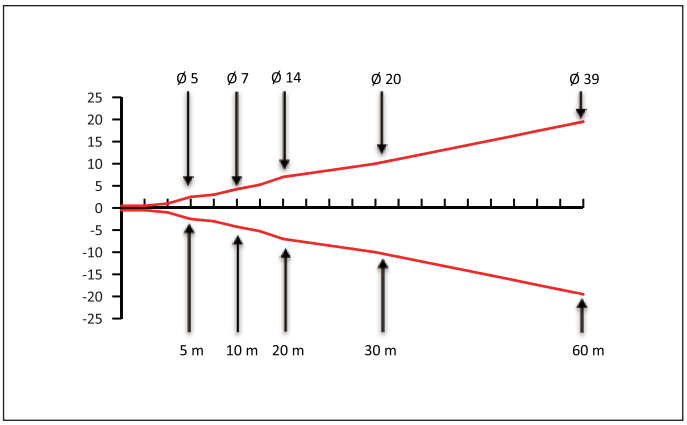

OS50-R (mm)

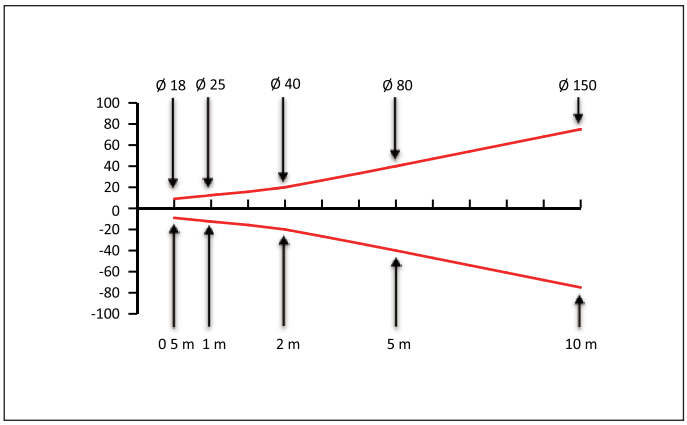

OS50-RP (mm)

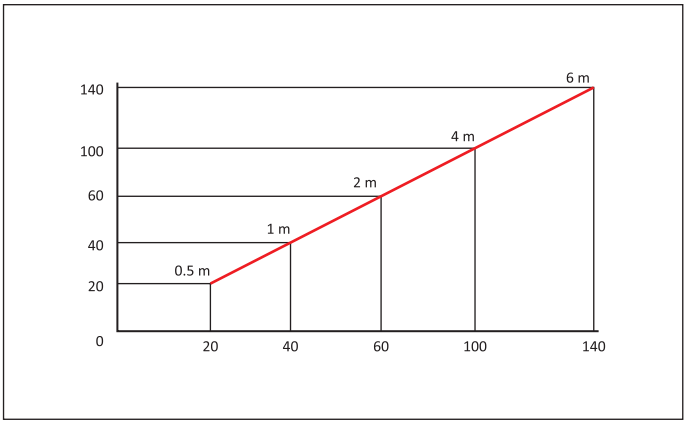

OS50-K1000 (mm)

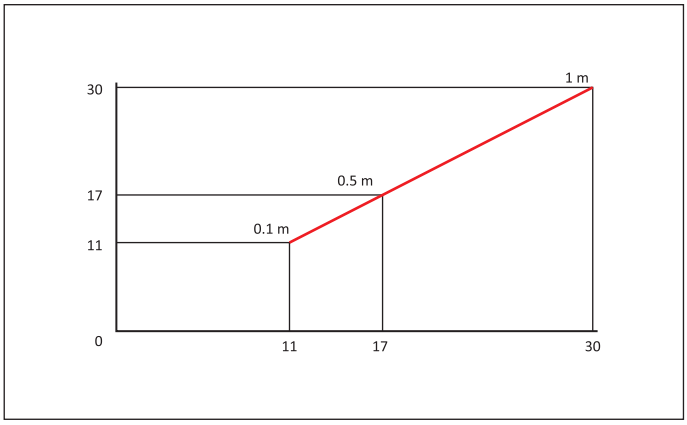

OS50 SERIES

BEAM PATTERN

OS50-K2500 (mm)

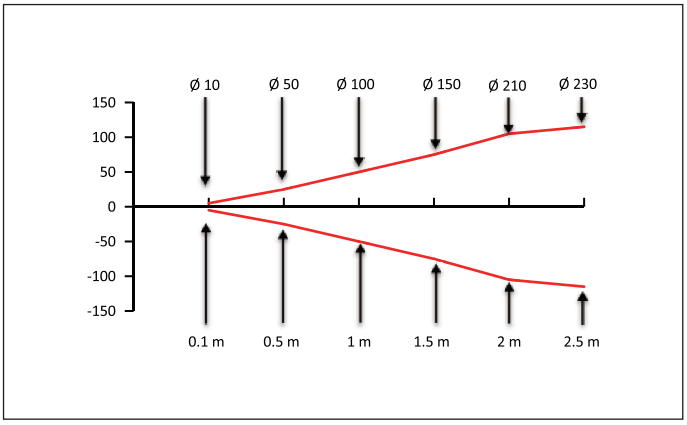

OS50-K3500 (mm)

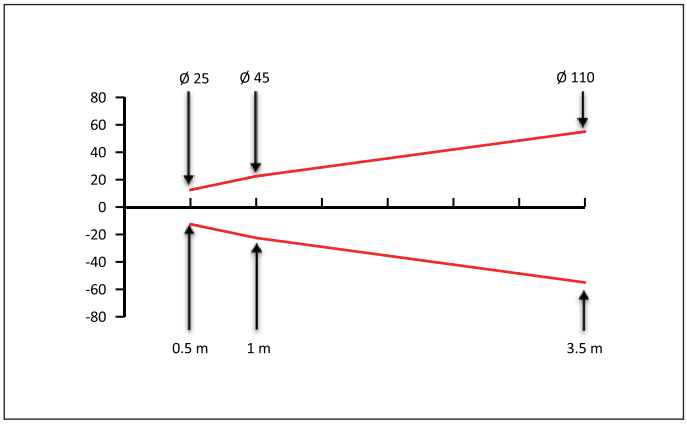

OS50-K7000 (mm)

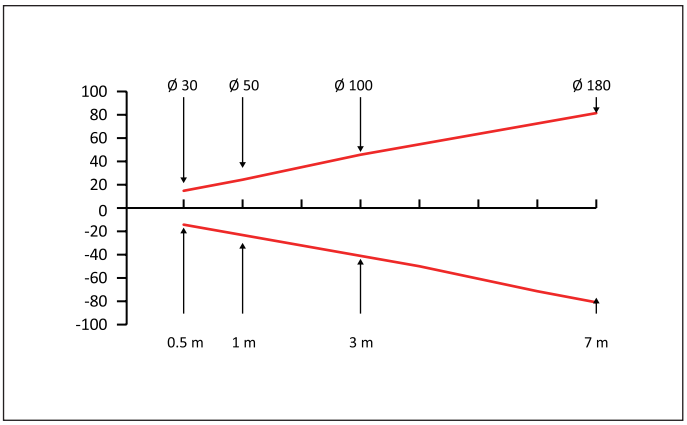

DIMENSIONS

Fig. 1 Cable, Opposed

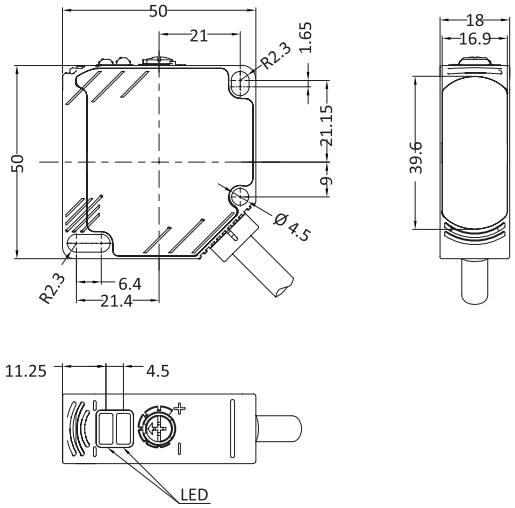

Fig. 2 M12 connector, Opposed

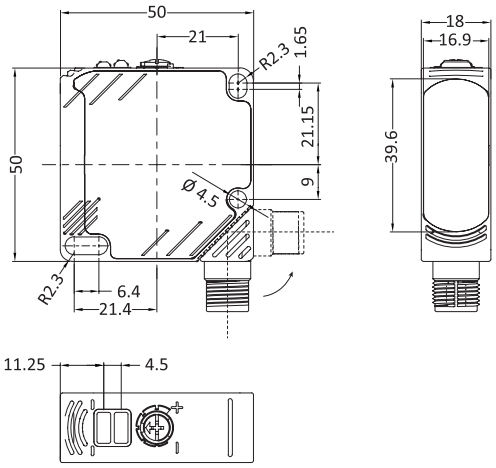

Fig. 3 Cable, Retro-reflective, Polarized retro-reflective, Diffused

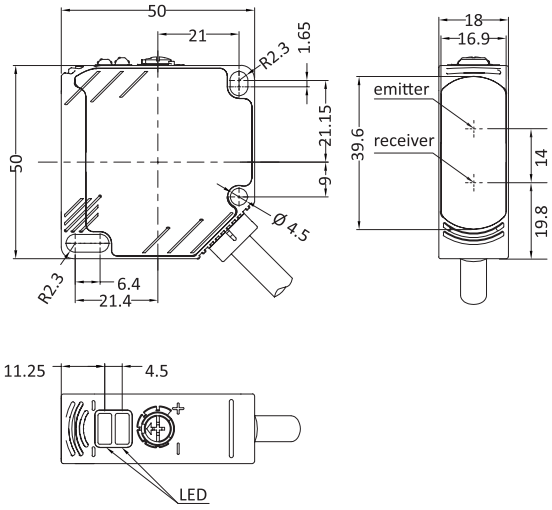

Fig. 4 M12 connector, Retro-reflective, Polarized retro-reflective, Diffused

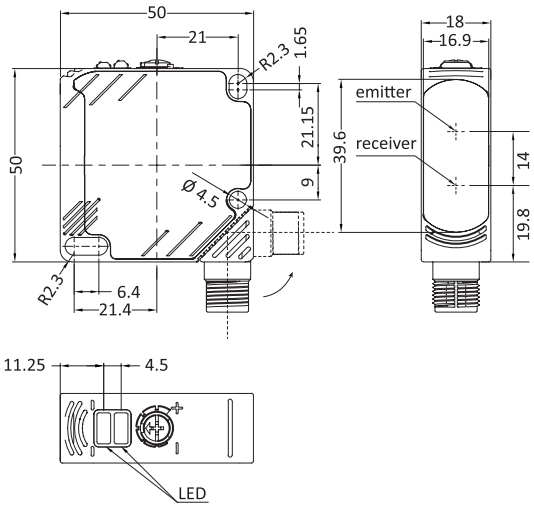

OS50 SERIES

MOUNTING BRACKET (STANDARD)

EOS50-1

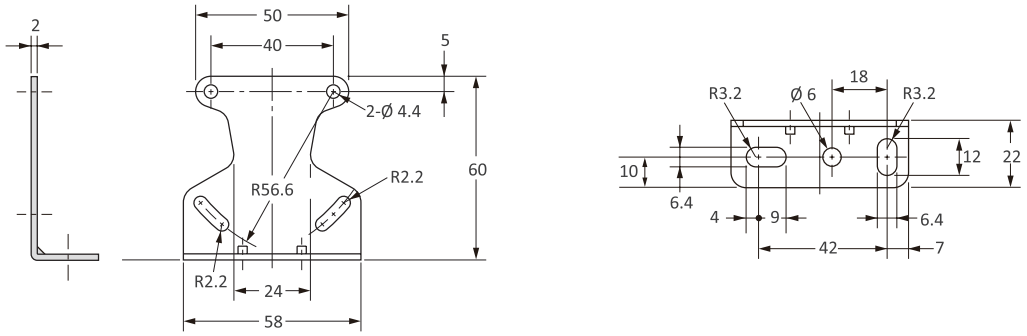

REFLECTOR

RB50x50-1 (standard)

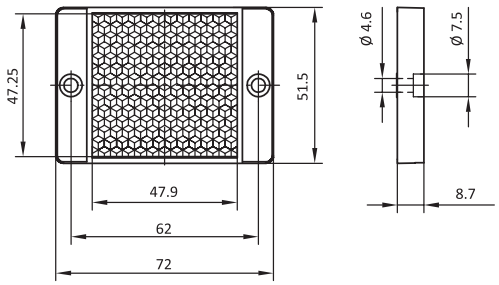

SALES AND SERVICE

Tianjin Elco Automation Co., Ltd
No. 12, 4th XEDA Branch Road
Xiqing Economic-Technological Development Area
Tianjin 300385, P.R. China
Office Phone: 022 23788282
E-Mail: info@elco.cn
www.elcoautomation.com.cn

Elco Industrie Automation GmbH
Häldenfeld 8
71723 Großbottwar
Germany
Office Phone: +49 7062 / 6599-260
E-Mail: info@elco-automation.de
www.elco-automation.de

Elco Automation LLC
1097 Highway 101 South, Suite D-16 Greer
South Carolina 29651, USA
Office Phone: +1 864-581-7431
E-Mail: infousa@elcoautomation.com
www.elcoautomation.com

Elco Industrial Automation Pvt Ltd.
No 80, 1st Main, 2nd Cross, Royal Enclave,
Sidedahalli, Nagasandra Bangalore 560073, India
Office Phone: +91-7259931777
E-Mail: info@elcoautomation.in
www.elcoautomation.com

Elco Automation Korea Ltd.
706, 17 Daehak 4-ro, Yeongtong-gu, Suwon-si,
Gyeonggi-do, Republic of Korea, 16226
Office Phone: +82-31-216-7890
E-Mail: sales@elcoautomation.co.kr
www.elcoautomation.com